Wall-mounted intakes

# CWS-ODA1



## Description

The CWS-ODA1 wall-mounted air intake unit is designed for mechanical ventilation systems with heat recovery (recuperation). It ensures efficient intake of fresh air from outside while maintaining optimal air velocities and low air resistance. The wall-mounted air intake is made of high-quality galvanized steel, ensuring high corrosion resistance and durability during many years of outdoor use. The entire unit is coated with a powder-coated finish in RAL9016, which further protects the surface against weather conditions, UV radiation, and mechanical damage, while ensuring an aesthetic appearance.
The unit features a contoured front with a rain guard that limits the entry of precipitation into the ventilation duct while ensuring unobstructed airflow. At the rear, there is a nipple-type connection fitting with an EPDM gasket, enabling a quick and airtight connection to the ventilation system.
The air intake is equipped with a protective mesh made of corrosion-resistant material, which protects the system from the ingress of leaves, insects, and other contaminants. The smooth interior surfaces minimize the accumulation of dust and other contaminants, which facilitates periodic cleaning and helps maintain the high efficiency of the ventilation system.

**Product code example**

Product code: **CWS-ODA1-160-250-250**

type
joint diameter Ød
height
width

## Dimensions

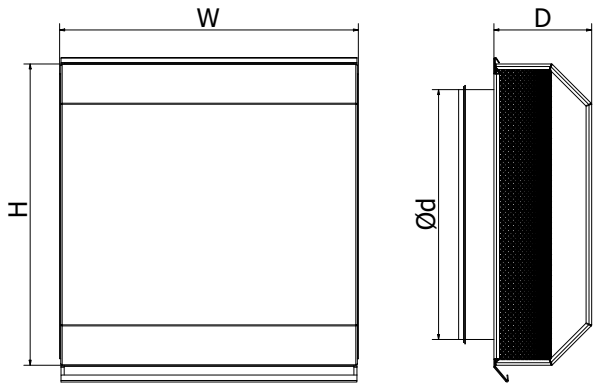


| *Index* | *Ød [mm]* | *H [mm]* | *W [mm]* | *D [mm]* |
|---|---|---|---|---|
| CWS-ODA1-100-160-160 | 100 | 160 | 160 | 45 |
| CWS-ODA1-125-160-160 | 125 | 160 | 160 | 45 |
| CWS-ODA1-160-250-250 | 160 | 250 | 250 | 65 |
| CWS-ODA1-200-250-250 | 200 | 250 | 250 | 65 |
| CWS-ODA1-200-300-300 | 200 | 300 | 300 | 95 |
| CWS-ODA1-250-300-300 | 250 | 300 | 300 | 95 |
| CWS-ODA1-250-400-400 | 250 | 400 | 400 | 115 |
| CWS-ODA1-315-400-400 | 315 | 400 | 400 | 115 |

The geometry of the wall air intakes has been designed so that the air velocity at the inlet to the air intake does not exceed 2.5 m/s.

| *Index* | *Recommended maximum airflow [$m^3/h$]* |
|---|---|
| CWS-ODA1-100-160-160 | 125 |
| CWS-ODA1-125-160-160 | 125 |
| CWS-ODA1-160-250-250 | 250 |
| CWS-ODA1-200-250-250 | 250 |
| CWS-ODA1-200-300-300 | 500 |
| CWS-ODA1-250-300-300 | 500 |
| CWS-ODA1-250-400-400 | 800 |
| CWS-ODA1-315-400-400 | 800 |



ALNOR® ventilation systems
is a registered trademark protected by a technical patent. All modification rights reserved.

Wall-mounted intakes

# CWS-ODA1

## *Technical data*

The volumetric flow rate qv (l/s or m³/h) and the static pressure drop Δps (Pa) can be read from the graph below.

Aerodynamic characteristics:

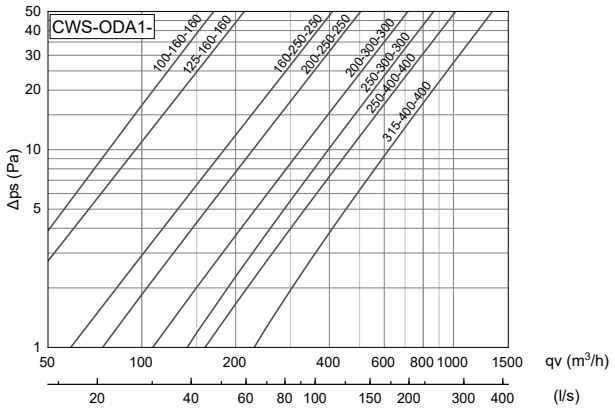




ALNOR® ventilation systems
is a registered trademark protected by a technical patent. All modification rights reserved.