Duct electric heater
HDE

Description

HDE duct electric heaters are designed for use in ventilation systems which require raising or stabilizing the supplied air temperature.
The heater's enclosure is made from galvanized steel sheet. The heating resistors are made from stainless steel. The heating resistors form a spiral to ensure homogeneous heating of the air stream volume passing through them.
The external terminal box houses the connection terminal strip and the overtemperature protection.
The overtemperature protection is a system of two thermostats. The first thermostat is an automatic-reset temperature limiter set to trip at +60˚C. The other thermostat is a manual temperature limiter set to trip at +90˚C (once tripped, this device needs to be reset by hand).
The HDE ducted electric heater features EPDM gaskets at the connection ends.
The HDE can be installed in
in a vertical or horizontal duct, irrespective of the air flow direction.

The HDE ducted electric heater supports external temperature controllers and the PULSER controller.

Note:
When choosing a ducted electric heater, note that the supplied air temperature cannot exceed 40˚C.
The minimum air flow rate across the ducted electric heater must be 1.5 m/s.

Product code example
Product code: **HDE - 125 - 1,2**

type
Ød
power factor

Power factor: 1.2 x 1000 = 1200 W

Dimensions

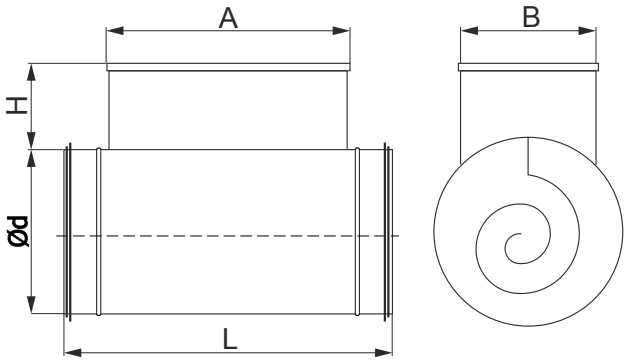

Type	Ød (mm)	A (mm)	B (mm)	H (mm)	L (mm)
HDE-100	100	280	100	110	380
HDE-125	125	280	100	110	380
HDE-150	150	280	120	110	380
HDE-160	160	280	120	110	380
HDE-200	200	300	160	110	400
HDE-250	250	300	190	110	400
HDE-315	315	300	190	110	400
HDE-355	355	300	240	110	430
HDE-400	400	300	240	110	430

ALNOR® ventilation systems
is a legally protected trademark and technical patent. All rights reserved.

Duct electric heater

HDE

Technical specifications

Type	Power (W)	Voltage (V)	Number of heating resistors (pcs)
HDE-100-0,3	300	1 x 230	1
HDE-100-0,6	600	1 x 230	2
HDE-100-0,9	900	1 x 230	3
HDE-100-1,2	1200	1 x 230	4
HDE-125-0,3	300	1 x 230	1
HDE-125-0,6	600	1 x 230	2
HDE-125-0,9	900	1 x 230	3
HDE-125-1,2	1200	1 x 230	4
HDE-125-1,5	1500	1 x 230	3
HDE-150-0,5	500	1 x 230	1
HDE-150-1,0	1000	1 x 230	2
HDE-150-1,5	1500	1 x 230	3
HDE-150-2,0	2000	1 x 230	4
HDE-160-0,5	500	1 x 230	1
HDE-160-1,0	1000	1 x 230	2
HDE-160-1,5	1500	1 x 230	3
HDE-160-2,0	2000	1 x 230	4
HDE-200-0,5	500	1 x 230	1
HDE-200-1,0	1000	1 x 230	2
HDE-200-1,5	1500	1 x 230	3
HDE-200-2,0	2000	1 x 230	4
HDE-200-3,0	3000	1 x 230	2
HDE-200-4,5	4500	3 x 400	3
HDE-250-0,5	500	1 x 230	1
HDE-250-1,0	1000	1 x 230	2
HDE-250-1,5	1500	1 x 230	3
HDE-250-2,0	2000	1 x 230	4
HDE-250-3,0	3000	1 x 230	2
HDE-250-4,5	4500	3 x 400	3
HDE-315-3,0	3000	1 x 230	2
HDE-315-4,5	4500	3 x 400	3
HDE-315-9,0	9000	3 x 400	6
hde-355-4,5	4500	3 X 400	3
HDE-355-9,0	9000	3 x 400	3
HDE-400-4,5	4500	3 X 400	3
HDE-400-9,0	9000	3 x 400	3
HDE-400-18,0	18000	3 x 400	6

Connection diagram

Single-phase HDE ducted electric heater with a total power ≤ 2000 W

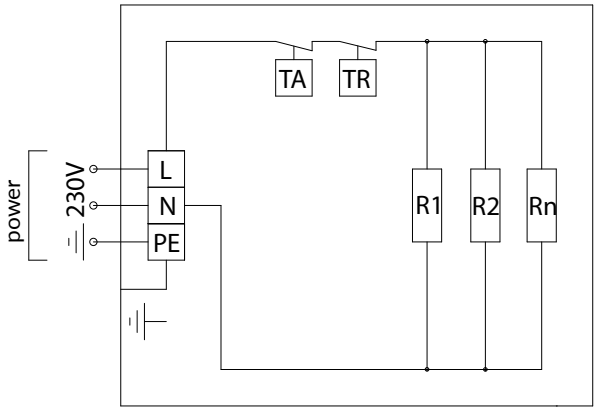

L, N - 1 x 230V, 50 Hz single-phase power supply
PE - protective conductor
R1, R2…Rn - heating resistors
TA - automatic temperature limiter, trips at +60˚C (with automatic reset
TR - temperature limiter with manual reset, trips at +90˚C (non-automatic)

Single-phase HDE ducted electric heater with a total power ≤ 3000W

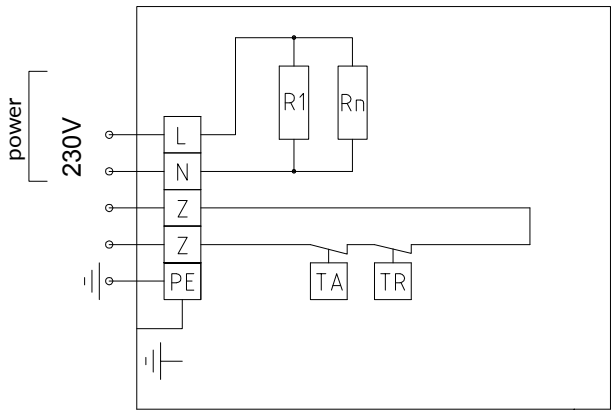

L, N - 1 x 230V, 50 Hz single-phase power supply
PE - protective conductor
R1, R2…Rn - heating resistors
Z-Z - temperature limiter terminals
TA - automatic temperature limiter, trips at +60˚C (with automatic reset))
TR - temperature limiter with manual reset, trips at +90˚C (non-automatic)

ALNOR® ventilation systems
is a legally protected trademark and technical patent. All rights reserved.

Connection diagram

three-phase HDE duct electric heater with a total power ≤ 4500 W / 9000 W

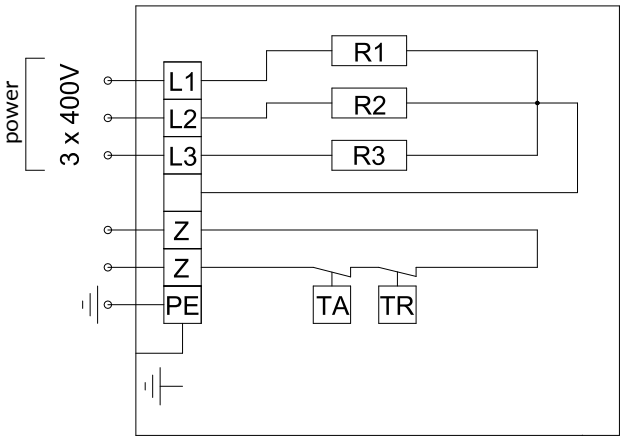

L1, L2, L3 - 3 x 400V, 50 Hz three-phase power supply
PE - protective conductor
R1, R2…Rn - heating resistors
Z-Z - temperature limiter terminals
TA - automatic temperature limiter, trips at +60˚C (with automatic reset)
TR - temperature limiter with manual reset, trips at +90˚C (non-automatic)

three-phase HDE duct electric heater with a total power ≤ 9000 W / 18000 W

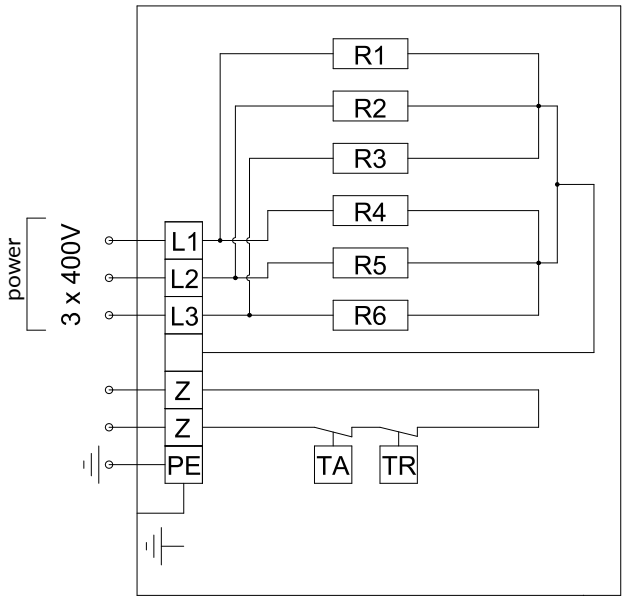

L1, L2, L3 - 3 x 400V, 50 Hz three-phase power supply
PE - protective conductor
R1, R2…Rn - heating resistors
Z-Z - temperature limiter terminals
TA - automatic temperature limiter, trips at +60˚C (with automatic reset)
TR - temperature limiter with manual reset, trips at +90˚C (non-automatic)

Technical specifications

Selection chart for HDE ducted electric heaters with a maximum total power of 2000 W

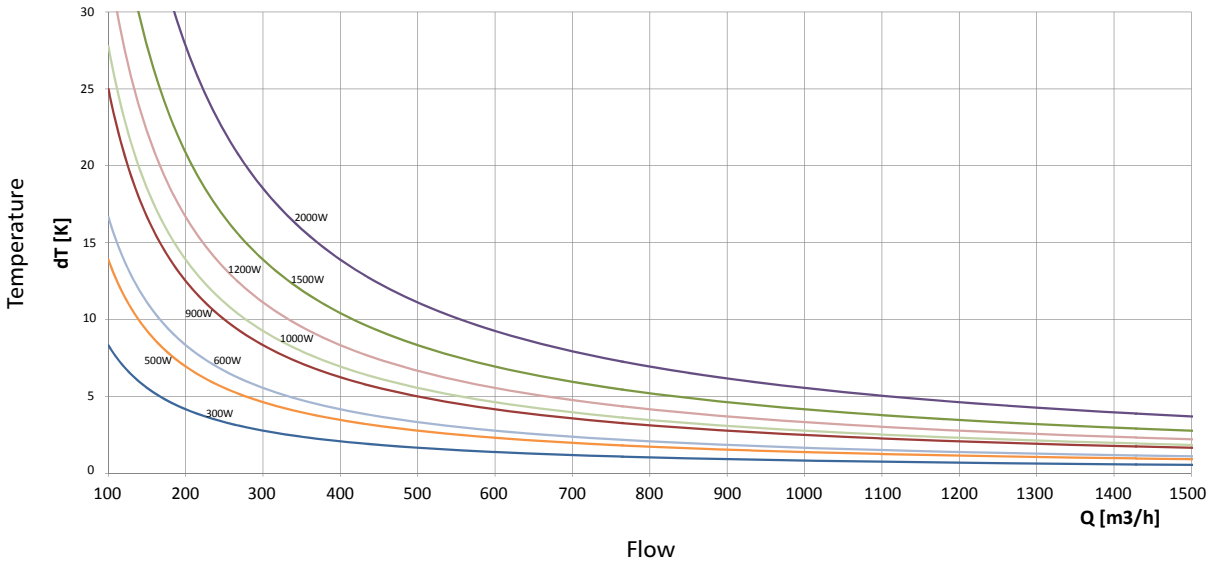

ALNOR® ventilation systems
is a legally protected trademark and technical patent. All rights reserved.

Duct electric heater

HDE

Technical specifications

Selection chart for HDE duct electric heaters with a maximum total power of 3000 W / 4500 W / 9000 W / 18000 W

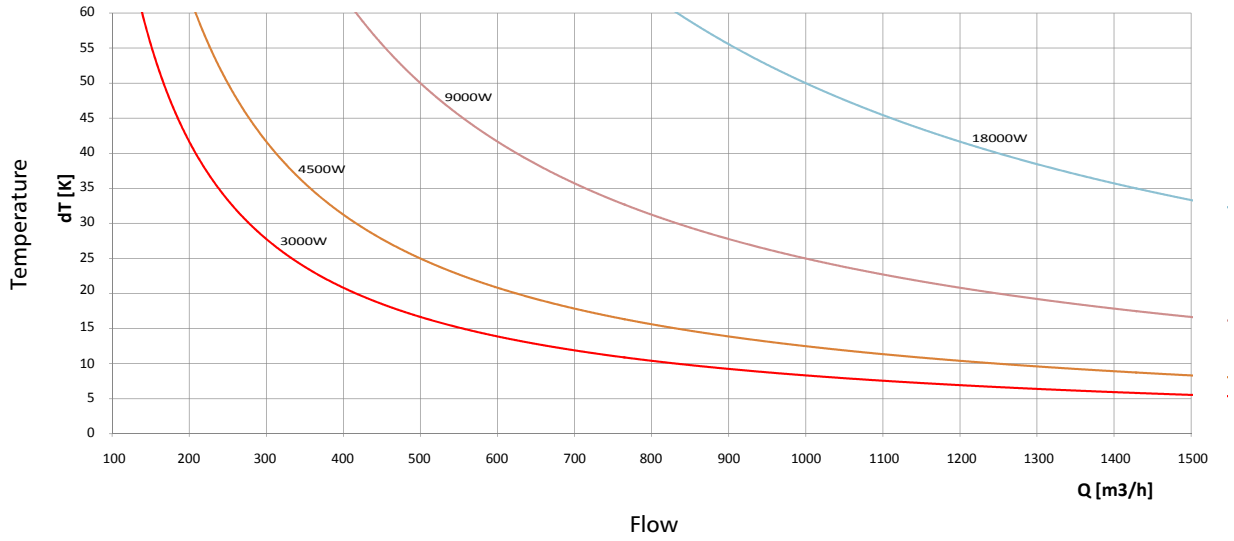

The characteristics are a graphic representation of the following relation: **P = Q x cw x dT x p**, with:
P — heating power of the ducted electric heater (W)
Q — air output from the ducted electric heater (m^3/h)
cw = 1005 — specific heat of air (J/kgK)
dT — temperature difference (K)
p = 1.29 — air density (kg/m^3)
once reduced: **P = Q x 0.36 x dT**

Available combinations

HDE 230V duct electric heater

+

Pulser controller

HDE 230V ducted electric heater

+

Pulser controller

+

TG-K330 ducted air temperature sensor

ALNOR® ventilation systems
is a legally protected trademark and technical patent. All rights reserved.

Available combinations

HDE 400V duct electric heater

+

TTC2000 controller

HDE 400V duct electric heater

+

TTC2000 controller

+

TG-K330 duct air temperature sensor

ALNOR® ventilation systems
is a legally protected trademark and technical patent. All rights reserved.