MANDÍK®

alnor®
systemy wentylacji

CE

EN 15650:2010

FIRE DAMPER
FDMD

ALNOR Systemy Wentylacji Sp. z o.o.
Aleja Krakowska 10, 05-552 Wola Mrokowska
tel. 22 7374000, fax. 22 7374004
www.alnor.com.pl

These technical specifications state a row of manufactured sizes and models of fire dampers (further only dampers) FDMD. It is valid for production, designing, ordering, delivery, assembly and operation.

I. CONTENT

II. GENERAL INFORMATION

1. Description

1.1. Fire dampers are shutters in piping systems of air-conditioning devices that prevent spreading the fire and combustion products from one fire segment to the other one by means of closing the air piping in the points of fire separating constructions.

1.2. Basic dampers parameters

- fire damper tests provided according to EN 1366-2 and EN 15650.
- fire damper classified according to EN 13501-3 + A1 as
  EI 90 (ve ho i↔o) S
- casing (external) leakage classified as class C according to EN 1751
- closed blade (internal) leakage classified as class 2 according to EN 1751
- fulfil all the prescribed requirements of EN 15650, art. 4.2.2. Protection against corrosion
- dampers are classified as C10000 (cycling test) according to EN 15650

1.3. Dampers blade automatically closes air duct using a shutting spring or an actuating mechanism back spring. The back spring of the actuating mechanism is started when the thermoelectrical starting mechanism BAE 72B-S is activated, when a reset button on BAE 72B-S is pushed or when a power supply of the actuating mechanism is stopped.

1.4. The damper is sealed with a silicon packing against smoke penetration after closing the blade. At the same time, the damper blade is bedded in a material which enlarges its capacity and air proofs the air duct.

1.5. Operation of the dampers does not depend on the direction of air circulation. The dampers can be located in an arbitrary position.

1.6. Dampers have one inspection hole, since the shutting device and the inspection hole can be set into the most advantageous position (with respect to the operation and manipulation with the control device).

1.7. Exact damper function is provided under the following conditions:

a) Maximum air circulation speed: 12 $m.s^{-1}$
Maximum pressure difference: 1500 Pa

b) Dampers could be displaced into position “CLOSED” only in case that ventilator, or Air Handling Unit is switched off. The goal is the securing of proper closing and safe function of Fire Damper in case of Fire.

c) The air circulation in the whole damper section must be secured as steady on whole surface.

1.8. Dampers are designed for macroclimatic areas with mild climate according to EN 60 721-3-3.

1.9. Dampers are suitable for systems without abrasive, chemical and adhesive particles.

1.10. Temperature in the place of installation is permitted to range from - 20°C to + 50°C.

1.11. If is not noticed other way, all dimensions and weight are in millimeters and kilograms.

1.12. In this document are used next signs and units.

Key :

w	[$m.s^{-1}$]	air velocity
Δp	[Pa]	pressure loss
L_w	[dB]	level of acoustic output
ξ	[ ]	pressure loss coefficient
ρ	[$kg.m^{-3}$]	density
D	[mm]	dimension
S	[m^2]	area

2. Design

2.1. Design with mechanical control

2.1.1. Design with mechanical control with a thermal protective fuse which actuates the shutting device within 120 seconds at latest after the nominal start temperature 73 °C has been reached. Automatic initiation of the shutting device is not activated if the temperature does not exceed 70 °C. In case that other start temperatures are required, thermal fuses with nominal start temperature + 104 °C or +147 °C can be supplied (this requirement must be specified in the order).

2.1.2. Design with mechanical control according to the paragraph 2.1.1. can be complemented with a terminal switch signaling of the damper blade position "CLOSED". Terminal switch is connected via damper casing.

2.2. Actuating mechanism

2.2.1. Design with an actuating mechanism BLF 24-T or BLF 230-T (further only "actuating mechanism"). After being connected to power supply AC/DC 24V or 230V, the actuating mechanism displaces the damper blade into operation position "OPEN" and at the same time it pre-stretches its back spring. When the actuating mechanism is under voltage, the damper blade is in the position "OPEN" and the back spring is pre-stretched. Time needed for full opening of the flap blade from the position "CLOSED" to the position "OPEN" is maximum 140s. If the actuating power supply is cut off (due to loss of supply voltage, activation of thermoelectrical actuating mechanism or pushing the reset button on the thermoelectrical starting mechanism BAE 72B-S), the back spring displaces the damper blade into the breakdown position "CLOSED". The time of displacing the blade from the position "OPEN" to the position "CLOSED" takes maximum 16 s. In case that the power supply is restored again (the blade can be in any position), the actuating mechanism starts to re-displace the damper blade into the position "OPEN".
A thermoelectrical starting mechanism BAE 72B-S, which contains three thermal fuses Tf1 and Tf2/Tf3, is a part of the actuating mechanism. These fuses are activated when temperature +72 °C has been exceeded (the fuse Tf1 when the temperature around the damper and the fuses Tf2/Tf3 when the temperature inside the air-conditioning piping has been exceeded). After the thermal fuse Tf1 or Tf2/Tf3 has been activated, the power supply is permanently and irreversibly cut off and the actuating mechanism, by means of the pre-stretched spring, displaces the damper blade into the breakdown position "CLOSED".

2.2.2. Design with the communication and supply device BKN 230-24 and the actuating mechanism BLF 24-T-ST. It simplifies electrical wiring and interconnection of fire damper. It facilitates on site check and enables central control and checks of fire damper by means of a simple 2-conductor wiring.
BKN 230-24 functions as a decentralized network device for supplying the actuating mechanism BLF 24-T-ST with a spring back drive on one hand and on the other hand it transmits the signal informing about the fire damper position OPERATION and FAILURE through 2-conductor wiring to the central. Control command SWITCHED ON - SWITCHED OFF from the central through BKN 230-24 goes through the same wiring to the actuating mechanism.
To simplify the connection, the actuating mechanism BLF 24-T-ST is equipped with connecting plugs that are inserted directly to BKN 230-24. BKN 230-24 is supplied with a conductor and an EURO plug to be connected to the 230V mains.
2- conductor wiring is connected to BKN 230-24 by means of terminals 6 and 7.
If the drive is supposed to be controlled without any signal from the central, it can be switched on by means of a bridge between the terminals 3 and 4. A green LED pilot light on BKN 230-24 is on when voltage is present in the drive (AC 24V). If the button on BAE 72-S is switched on or if the power supply (e.g. by a signal from ELECTRICAL FIRE SIGNALISATION) is disconnected, the fire damper position will be "FAILURE".

2.2.3. Signaling damper blade position "OPEN" and "CLOSED" is secured by two built-in, firmly set terminal switches.

2.3. Communication and control devices

2.3.1. BKS 24-1B communication and control device is used for control and checks of fire flap valves with the BLF 24-T-ST actuating mechanism in conjunction with the BKN 230-24 supply and communication device. BKS 24-1B receives information about the situation of the fire damper through the BKN 230-24 supply and communication device and issues controlling commands.
The device is intended for building in into the distribution board. Light diodes on the front side of the device signalise the operating situations of the damper and breakdowns of the whole system. Nonpotential auxiliary contacts enable connection to the master control system (signalisation of the damper position, failure reports, release of the ventilators etc.).
While a flashing green LED pilot light signalises flap blade motion towards the given position, the same pilot light reports reaching the required position when shining constantly. If the damper, with respect to the given time, does not reach the required position, then a red LED pilot light starts to flash and at the same time, the failure contact is active. Once the damper blade reaches the given position, this contact is deactivated. The LED pilot light keeps flashing unless the failure is unblocked by means of the RESET button.

2.3.2. BKS 24-9A communication and control device is used for group control and checks of 1 to 9 fire dampers with the actuating mechanism BLF 24-T-ST in connection with the supply and communication device BKN 230-24. Signalisation of the damper position is individual; the dampers can be controlled and tested only as a group. BKS 24-9A is intended for use in the distribution board and displays the operation situations and failure reports of the connected fire dampers. It is possible to signalise functions such as the damper position and failure reports or to transmit them further to the system by means of integrated auxiliary switches. BKS 24-9A receives signals from BKN 230-24 through the two-conductor wiring and issues control commands. Proper damper operation is indicated by two light LED diodes:

Control ON = position OPERATION
Control OFF = position FAILURE

If the fire dampers do not reach the given position in time tolerable for displacing, the appropriate light diode FAILURE starts to flash and K1 contact is opened (current failure). In case that the faulty damper finally reaches its given position, K1 is closed and the failure report light shines (the failure is saved in memory).
K2 - the auxiliary contact - is used for signalisation of the flap position to the master device. Function of this auxiliary contact can be programmed through the terminal 14 according to the Tab. 2.2.1.

Tab. 2.3.1. BKS 24 -9A contacts K1 and K2

K1 Function Contact		Programming K2 Auxiliary Contact		
Situation	**State**	**Function**	**Interconnection**	**State**
Current Failure	15 — 16	K2 contact is on if all the damperss are open	14 — 11	17 — 18
		K2 contact is on if the damper No. 1 is open	14 — 12	
No Failure	15 — 16	K2 contact is on if all the dampers are closed	14 open	

Function check can be done in the position OPERATION by means of pushing the TEST button. While the button is pushed, the flap blade is turning into the position FAILURE. Fault function is indicated by a report "FAILURE".

2.4. Design of the FDMD in terms of design. It shall be marked with the first and second additional digit after the dot in the ordering key.

Tab. 2.4.1. Dampers design

Dampers design	Additional digit
Thermal	.01
Thermal with a terminal switch ("CLOSED")	.11
With actuating mechanism BLF 230-T	.40
With actuating mechanism BLF 24-T	.50
With communication and supply device BKN 230-24 and actuating mechanism BLF 24-T-ST*	.60

*** communication and supply device BKN 230-24 has to be placed near the damper. It is necessary for easy connection of actuating system equipped by BKN 230-24 device.**

Fig. 1

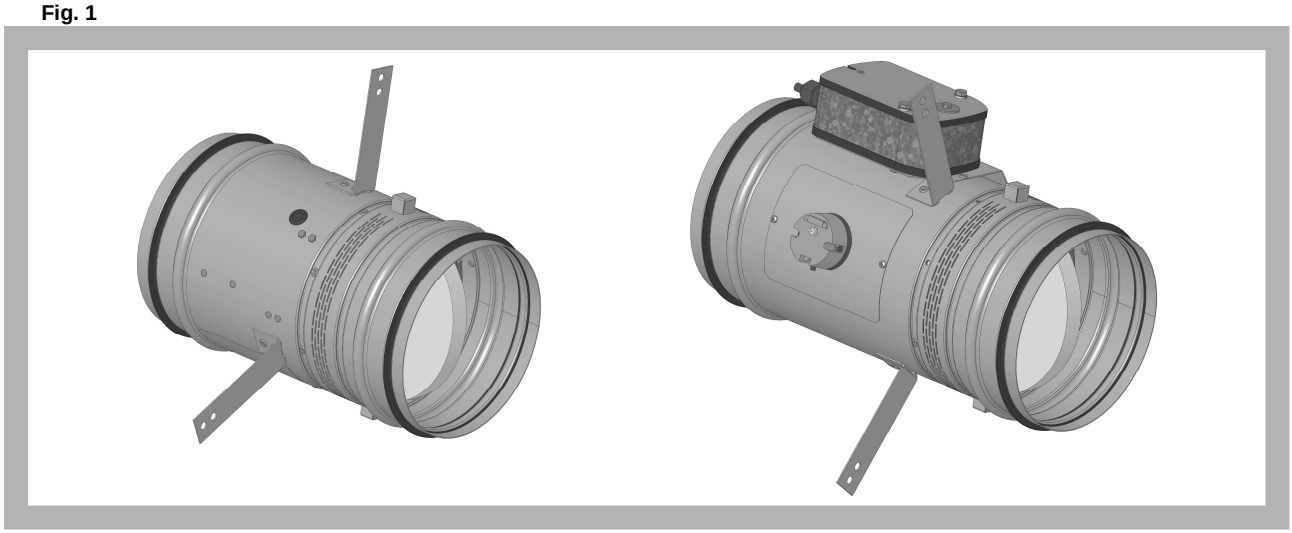

3. Dimestions, weights

3.1. Dimensions

Fig. 2 Fire damper FDMD - design with mechanical control

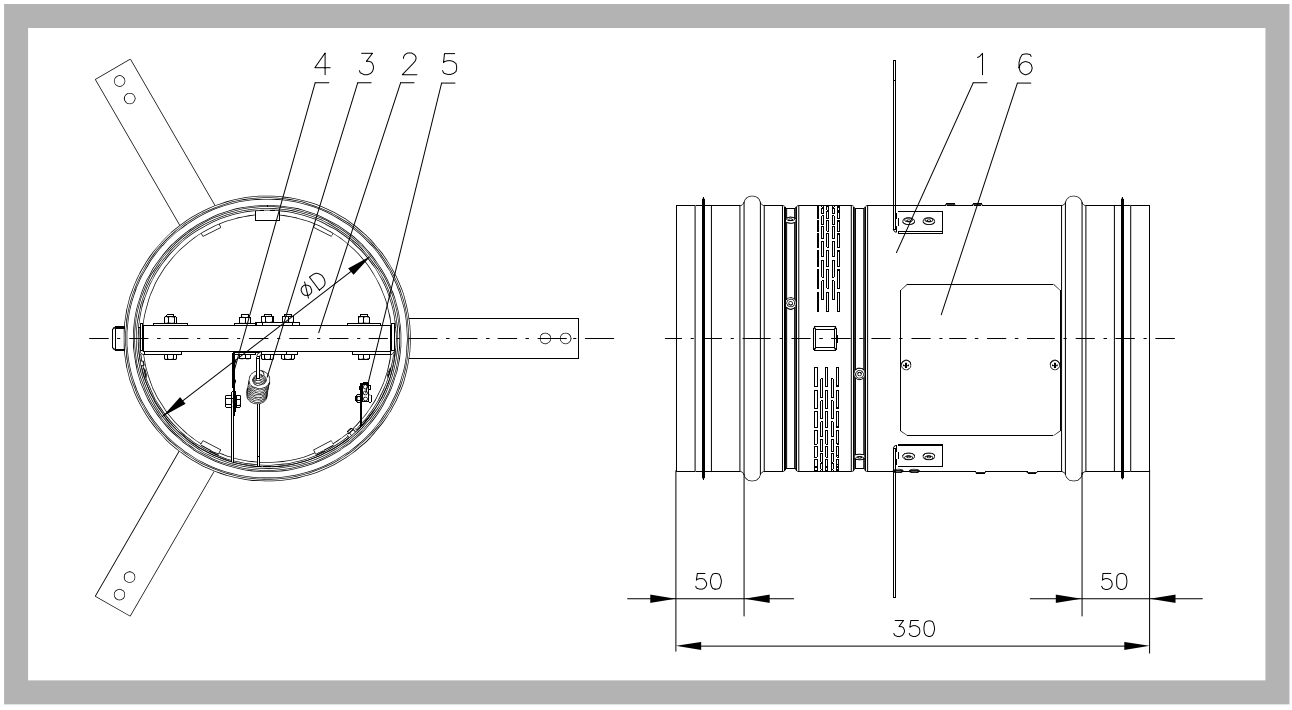

Fig. 3 Fire damper FDMD - design with actuating mechanism

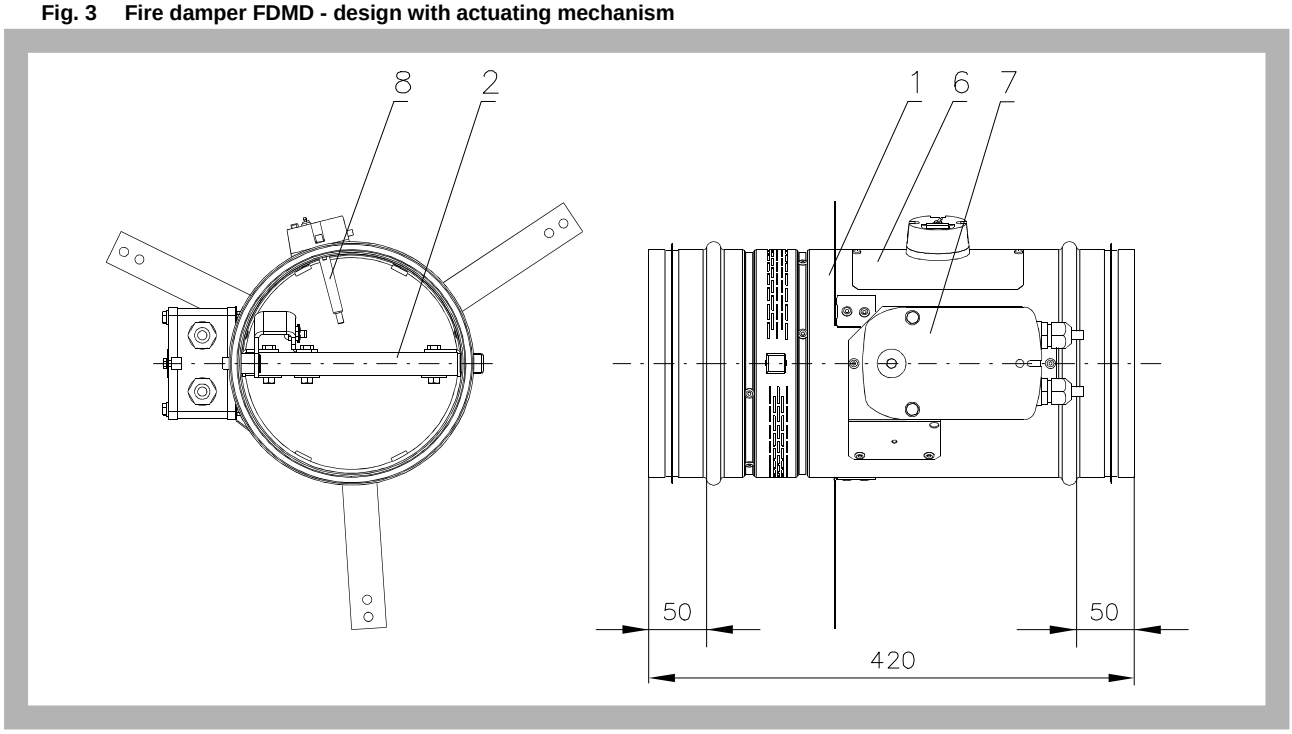

Position:

1	Damper casing	5	Terminal switch
2	Damper blade	6	Inspection hole covering
3	Shutting spring	7	Actuating mechanism
4	Thermal protective fuse	8	BAE 72B-S thermoelectrical starting mechanism

3.2. Weights and effective area

Tab. 3.2.1. Weights and effective area

Size ⌀ D	Weight [kg]		Effective area S_{ef} [m^2]	Actuating mechanism
	mechanical control	actuating mechanism		
100	1,2	3,3	0,0032	BLF
125	1,4	3,7	0,0063	BLF
140	1,6	3,9	0,0086	BLF
150	1,7	4,0	0,0102	BLF
160	1,8	4,1	0,0122	BLF
180	2,1	4,4	0,0164	BLF
200	2,6	4,7	0,0213	BLF

4. Placement and Assembly

4.1. Fire dampers are suitable for installation in arbitrary position in vertical and horizontal passages of fire separating constructions. Damper assembly procedures must be done so as all load transfer from the fire separating constructions to the damper body is absolutely excluded. Back-to-back air-conditioning piping must be hung or supported so as all load transfer from the back-to-back piping to the damper is absolutely excluded.

4.2. To provide needed access space to the control device, all other objects must be situated at least 350 mm from the control parts of the damper. Inspection hole must be accessible.

4.3. The distance between the fire damper and the construction (wall, ceiling) must be minimum 75 mm. In case that two or more dampers are supposed to be installed in one fire separating construction, the distance between the adjacent dampers must be at least 200 mm according to EN 1366-2 paragraph 13.5.

Fig. 5 Installation of two or more dampers in one fire separating construction

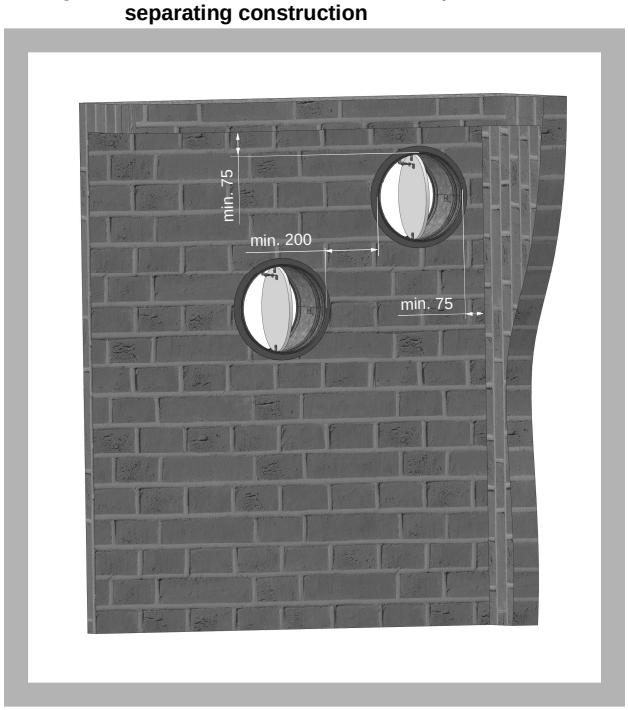

4.4. After installation has to be damper blade placed (in position “CLOSED”) inside of fire separating construction.

4.5. The control mechanism has to be protected (covered) against damage and pollution during installation process. All fire dampers has to be closed during installation process. The damper body should not be deformed in the course of bricking in. Once the damper is built in, its blade should not grind on the damper body during opening or closing.

4.6. Installation opening dimensions

Fig. 6 Installation opening - Space between damper and wall is filled by mortar

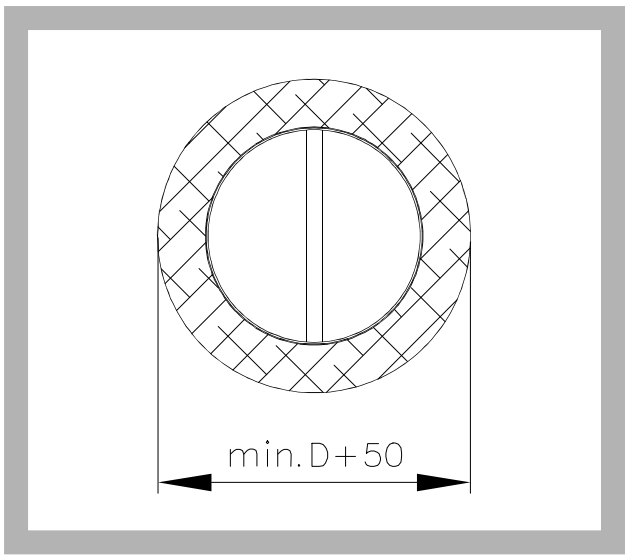

Fig. 7 Installation opening - Space between damper and wall is filled by mineral stone wool and fire protection mastic

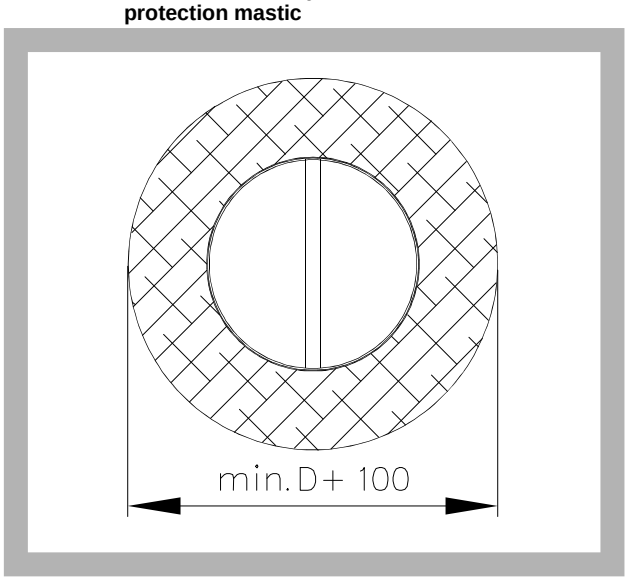

Fig. 8 Installation opening - system Weichschott

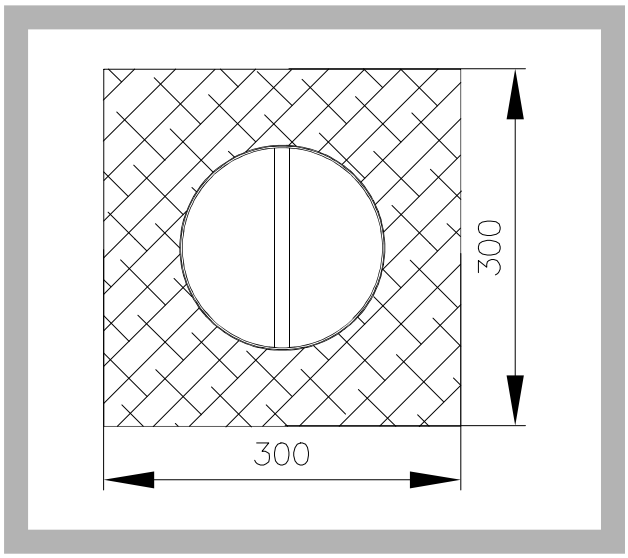

5. Statement of installations

5.1. Statement of installations

Tab. 5.1.1. Statement of installations

Size	FDMD installation	Classification	Figure
100-200	Damper installed in a solid wall construction min. thickness 100 mm. Space between damper and wall is filled by mortar, gypsum (notice 1)	EIS 90	9
	Damper installed in a solid wall construction min. thickness 100 mm. Space between damper and wall is filled by mineral stone wool min. density 140 kg/m^3). Surface is covered by fire protection mastic min. thickness 1 mm (notice 1)	EIS 90	10
	Damper installed in a gypsum wall construction, classification EI 90. Space between damper and wall is filled by mineral stone wool min. density 140 kg/m^3). Surface is covered by fire protection mastic min. thickness 1 mm	EIS 90	11
	Damper installed in a solid wall construction min. thickness 100 mm. Space between damper and wall is filled by system Weichshott (notice 1)	EIS 90	12
	Damper installed in a gypsum wall construction, classification EI 90. Space between damper and wall is filled by system Weichshott.	EIS 90	13
	Damper installed in a solid ceiling construction min. thickness 150 mm. Space between damper and wall is filled by mortar, gypsum (notice 2)	EIS 90	14
	Damper installed in a solid ceiling construction min. thickness 150 mm. Space between damper and wall is filled by mineral stone wool min. density 140 kg/m^3). Surface is covered by fire protection mastic min. thickness 1 mm (notice 2)	EIS 90	15
	Damper installed in a solid ceiling construction min. thickness 150 mm. Space between damper and wall is filled by system Weichshott (notice 1)	EIS 90	16

NOTICE:
1) Solid wall construction: normal concrete/masonry or porous concrete with minimum thickness 100 mm
2) Solid ceiling construction: normal concrete/masonry or porous concrete with minimum thickness 150 mm

Fig. 9 Installation in a solid wall construction

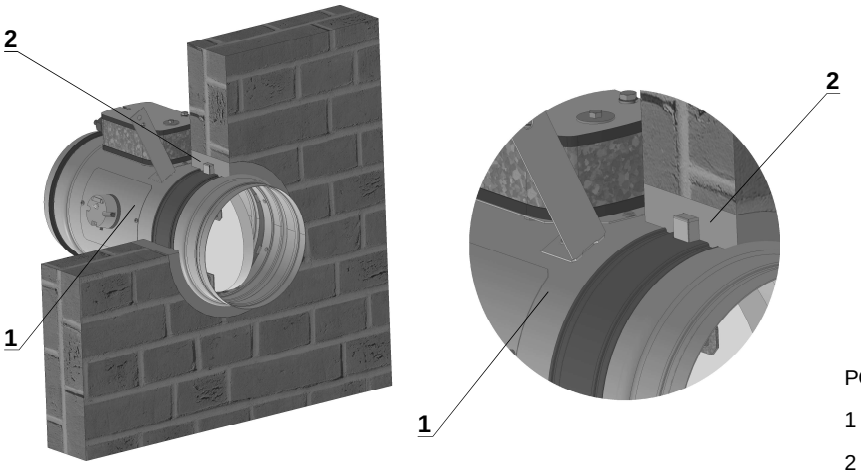

POSITION

1 Fire damper FDMD

2 Mortar or gypsum with min. density 800 kg/m^3

Fig. 10 Installation in a solid wall construction

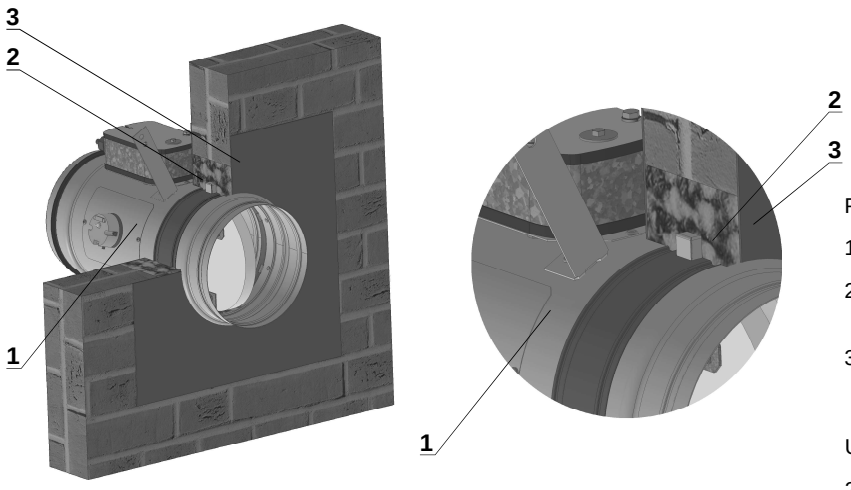

POSITION

1 Fire damper FDMD

2 Stuffing box (mineral stone wool min. density 140 kg/m^3)

3 Fire protection mastic min. thickness 1 mm

Used materials - example*:

2 Promapyr, Rockwool Steprock HD

3 Promastop - P, K

* Stuffing box and fire protection mastic can be replaced by another approved fire sealing system for damper installation with equivalent material properties.

Fig. 11 Installation in a solid wall construction

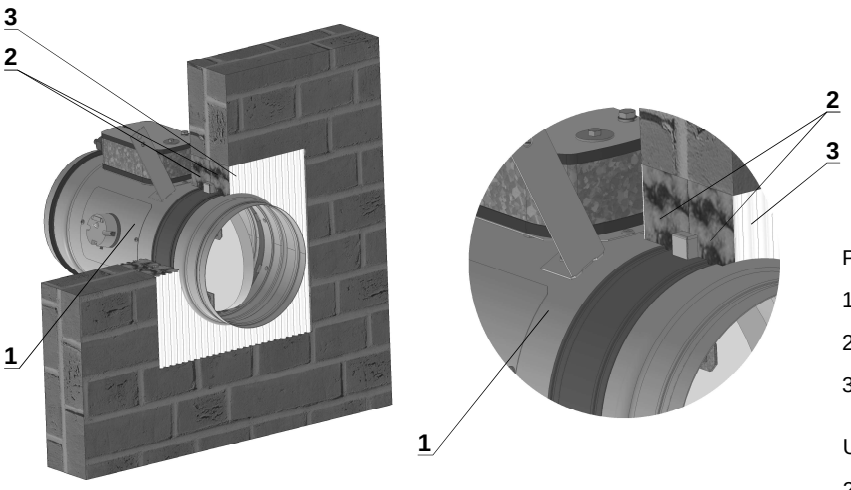

POSITION

1 Fire damper FDMD

2 Fire resistant board

3 Fire stop coating thickness 1 mm

Used materials - example*:

2 Hilti CP673 PF

3 Hilti CP673

Fig. 12 Installation in a gypsum construction

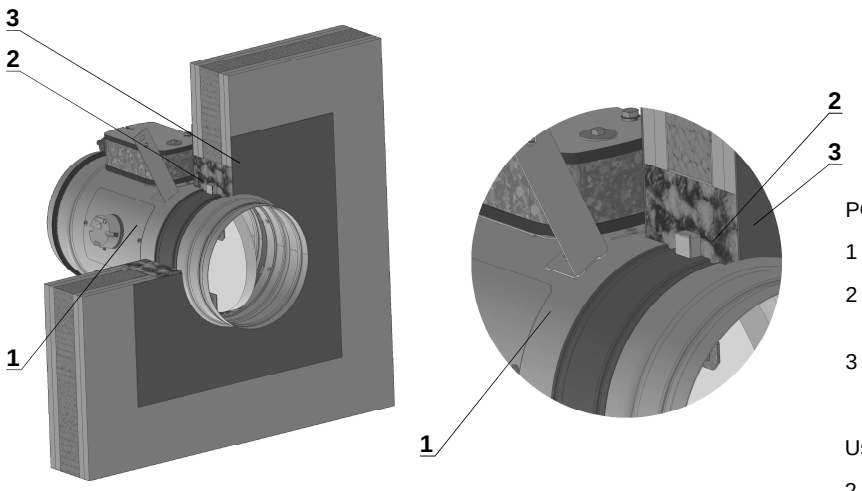

POSITION

1 Fire damper FDMD

2 Stuffing box (mineral stone wool min. density 140 kg/m³)

3 Fire protection mastic min. thickness 1 mm

Used materials - example*:

2 Promapyr, Rockwool Steprock HD

3 Promastop - P, K

* Stuffing box and fire protection mastic can be replaced by another approved fire sealing system for damper installation with equivalent material properties.

Fig. 13 Installation in a gypsum construction

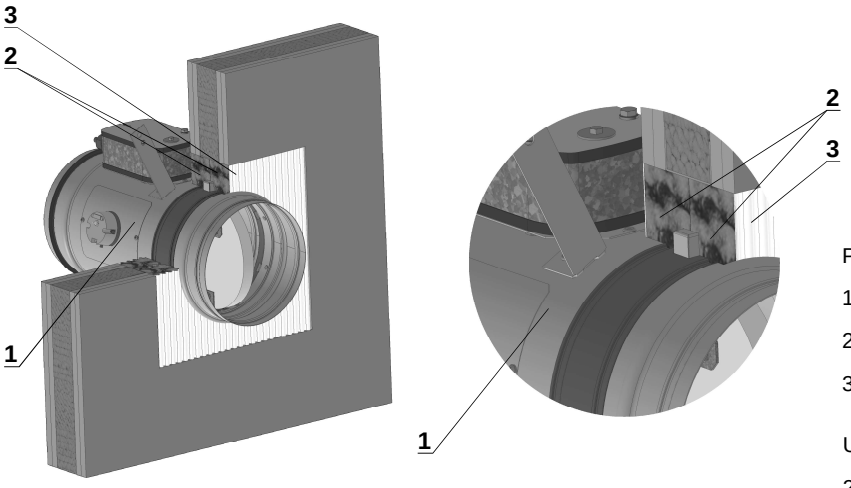

POSITION

1 Fire damper FDMD

2 Fire resistant board

3 Fire stop coating thickness 1 mm

Used materials - example*:

2 Hilti CP673 PF

3 Hilti CP673

Fig. 14 Installation in a solid ceiling construction

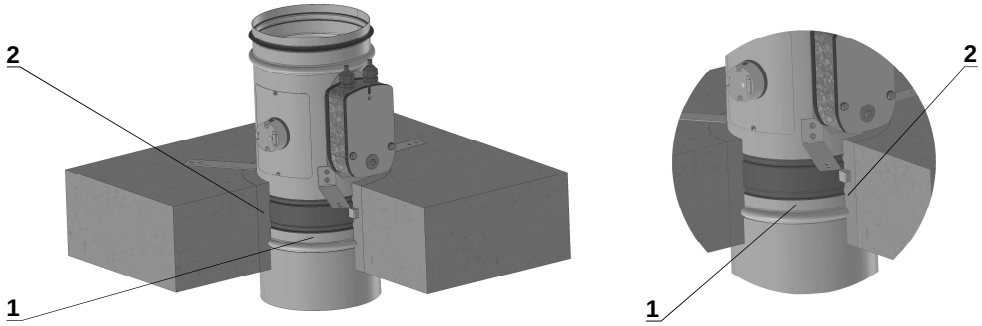

POSITION

1 Fire damper FDMD

2 Mortar or gypsum with min. density 800 kg/m³

Fig. 15 Installation in a solid ceiling construction

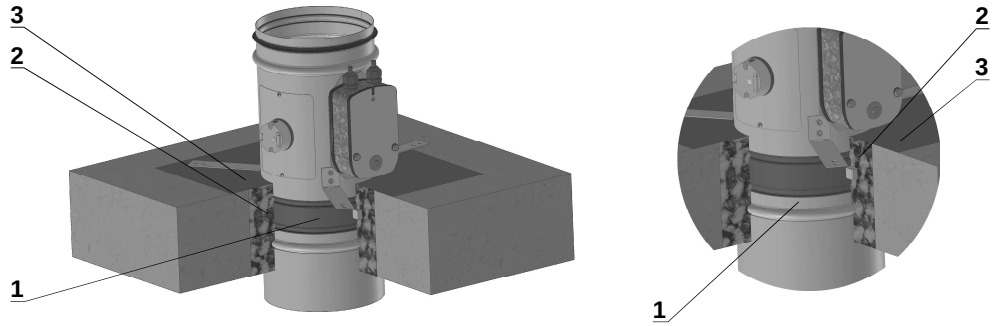

POSITION

1 Fire damper FDMD

2 Stuffing box (mineral stone wool min. density 140 kg/m³)

3 Fire protection mastic min. thickness 1 mm

Used materials - example*:

2 Promapyr, Rockwool Steprock HD

3 Promastop - P, K

* Stuffing box and fire protection mastic can be replaced by another approved fire sealing system for damper installation with equivalent material properties.

Fig. 16 Installation in a solid ceiling construction

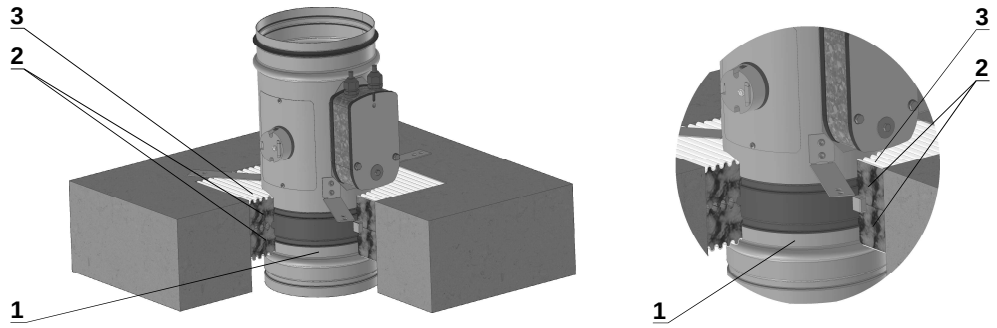

POSITION

1 Fire damper FDMD

2 Fire resistant board

3 Fire stop coating thickness 1 mm

Used materials - example*:

2 Hilti CP673 PF

3 Hilti CP673

III. TECHNICAL DATA

6. Pressure loss

6.1. Pressure loss calculation

$$\Delta p = \xi \cdot \rho \cdot \frac{w^2}{2}$$

Δp	[Pa]	presure loss
w	[m.s^{-1}]	air flow speed in nominal damper section
ρ	[kg.m^{-3}]	air density
ξ	[-]	coefficient of local pressure loss for the nominal damper section (see Tab. 7.1.1.)

6.2. Determination of pressure loss by using diagram 6.2.1. ρ = 1,2 kg.m^{-3}

Diagram 6.2.1. Pressure losses for air density ρ =1,2 kg.m^{-3}

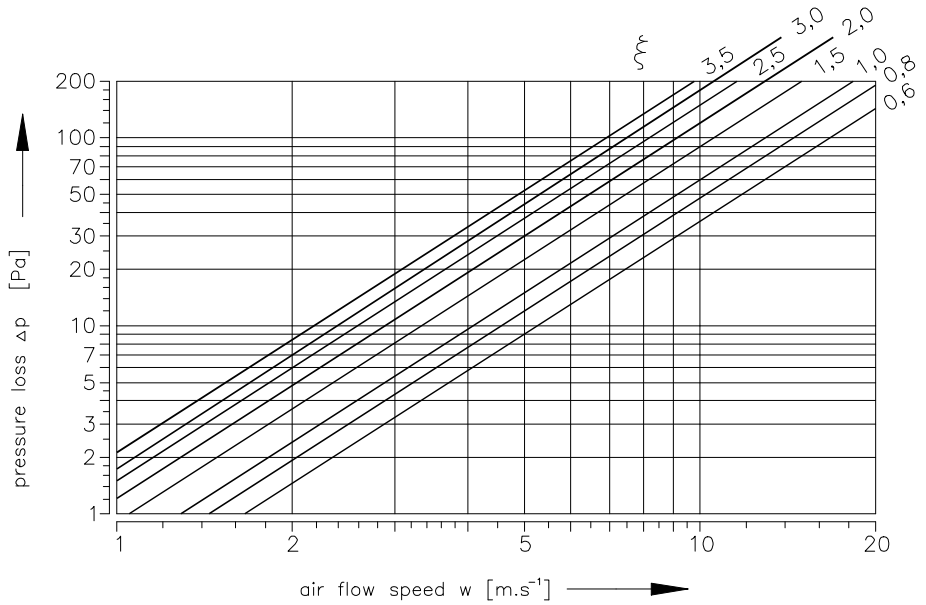

7. Coefficient of local pressure loss

7.1. Coefficient of local pressure loss ξ (-)

Tab. 7.1.1. Coefficient of local pressure loss

D	100	125	140	150	160	180	200
ξ	2,736	2,099	1,781	1,527	1,272	0,929	0,636

8. Noise data

8.1. Level of acoustic output corrected with filter A.

$$L_{WA} = L_{W1} + 10 \log(S) + K_A$$

L_{WA}	[dB(A)]	level of acoustic output corrected with filter A
L_{W1}	[dB]	level of acoustic output L_{W1} related to the 1 m^2 section (see Tab. 8.3.1.)
S	[m^2]	effective area of the damper
K_A	[dB]	correction to the weight filter A (see Tab. 8.3.2.)

8.2. Level of acoustic output in octave ranges.

$$L_{Woct} = L_{W1} + 10 \log(S) + L_{rel}$$

L_{Woct}	[dB]	spectrum of acoustic output in octave range
L_{W1}	[dB]	level of acoustic output L_{W1} related to the 1 m^2 section (see Tab. 8.3.1.)
S	[m^2]	effective area of the damper
L_{rel}	[dB]	relative level expressing the shape of the spectrum (see Tab. 8.3.3.)

8.3. Table of acoustics values

Tab. 8.3.1. Level of acoustic output L_{W1} related to the 1 m² section

	ξ [-]											
w [m.s⁻¹]	**0,1**	**0,2**	**0,3**	**0,4**	**0,6**	**0,8**	**1**	**1,5**	**2**	**2,5**	**3**	**3,5**
2	9,0	11,5	14,7	16,9	20,1	22,3	24,1	27,2	29,4	31,2	32,6	33,8
3	16,7	22,1	25,3	27,5	30,7	32,9	34,6	37,8	40,0	41,7	43,2	44,4
4	24,2	29,6	32,8	35,0	38,1	40,4	42,1	45,3	47,5	49,2	50,7	51,9
5	30,0	35,4	38,6	40,8	44,0	46,2	47,9	51,1	53,3	55,1	56,5	57,7
6	34,8	40,2	43,3	45,6	48,7	51,0	52,7	55,8	58,1	59,8	61,2	62,4
7	38,8	44,2	47,3	49,6	52,7	55,0	56,7	59,9	62,1	63,8	65,2	66,4
8	42,3	47,7	50,8	53,1	56,2	58,4	60,2	63,3	65,6	67,3	68,7	69,9
9	45,4	50,7	53,9	56,1	59,3	61,5	63,3	66,4	68,6	70,4	71,8	73,0
10	48,1	53,5	56,6	58,9	62,0	64,3	66,0	69,1	71,4	73,1	74,5	75,7
11	50,6	56,0	59,1	61,4	64,5	66,7	68,5	71,6	73,9	75,6	77,0	78,2
12	52,8	58,2	61,4	63,6	66,8	69,0	70,7	73,9	76,1	77,9	79,3	80,5

Tab. 8.3.2. Correction to the weight filter A

w [m.s⁻¹]	**2**	**3**	**4**	**5**	**6**	**7**	**8**	**9**	**10**	**11**	**12**
K_A [dB]	-15,0	-11,8	-9,8	-8,4	-7,3	-6,4	-5,7	-5,0	-4,5	-4,0	-3,6

Tab. 8.3.3. Relative level expressing the shape of the spectrum L_{rel}

	f [Hz]							
w [m.s⁻¹]	**63**	**125**	**250**	**500**	**1000**	**2000**	**4000**	**8000**
2	-4,5	-6,9	-10,9	-16,7	-24,1	-33,2	-43,9	-56,4
3	-3,9	-5,3	-8,4	-13,1	-19,5	-27,6	-37,4	-48,9
4	-3,9	-4,5	-6,9	-10,9	-16,7	-24,1	-33,2	-43,9
5	-4,0	-4,1	-5,9	-9,4	-14,6	-21,5	-30,0	-40,3
6	-4,2	-3,9	-5,3	-8,4	-13,1	-19,5	-27,6	-37,4
7	-4,5	-3,9	-4,9	-7,5	-11,9	-17,9	-25,7	-35,1
8	-4,9	-3,9	-4,5	-6,9	-10,9	-16,7	-24,1	-33,2
9	-5,2	-3,9	-4,3	-6,4	-10,1	-15,6	-22,7	-31,5
10	-5,5	-4,0	-4,1	-5,9	-9,4	-14,6	-21,5	-30,0
11	-5,9	-4,1	-4,0	-5,6	-8,9	-13,8	-20,4	-28,8
12	-6,2	-4,3	-3,9	-5,3	-8,4	-13,1	-19,5	-27,6

Fig. 17 Calculation example

Given data	Fire damper FDMD 200
	$\dot{V}$ = 600 $m^3.h^{-1}$
	ρ = 1,2 $kg.m^{-3}$
	Octave range 1000 Hz
Tab. 3.2.1.	S_{ef} = 0,0213 m^2
Calculation:	w [$m.s^{-1}$] = ($\dot{V}$ [$m^3.h^{-1}$] / 3600) / S_{ef} [m^2]
	w = 7,83 $m.s^{-1}$
Tab. 7.1.1.	ξ = 0,636
Calculation:	$\Delta p = \xi . \rho . (w^2/2) = 0{,}636 . 1{,}2 . (7{,}83^2/2) = 23{,}4$ Pa
Tab. 8.3.1., Tab. 8.3.2. a Tab. 8.3.3.	L_{W1} = 56,5 dB
	K_A = -5,5 dB
	L_{rel} = -10,7 dB (for1000 Hz)
Calculation:	$L_{WA} = L_{W1} + 10 \log(S_{ef}) + K_A = 56{,}5 + 10 \log(0{,}0213) - 5{,}5 = 34{,}3$ dB
	$L_{Woct} = L_{W1} + 10 \log(S_{ef}) + L_{rel} = 56{,}5 + 10 \log(0{,}0213) - 10{,}7 = 29{,}1$ dB

9. Electrical Components, Connection Diagrams

9.1. Actuating mechanism

Tab. 9.1.1. Actuating mechanism BELIMO BLF 24-T(-ST), BLF 230-T

Actuating mechanism BELIMO	**BLF 24-T-ST(24-ST)**	**BLF230-T**
Nominal voltage	AC 24V 50/60Hz DC 24 V	AC 230 V 50/60Hz
Power consumption - motoring - holding	5 W 2,5 W	5W 3W
Dimensioning	7 VA (Imax 5,8 A @ 5 ms)	7 VA (Imax 150 mA @ 10 ms)
Protection Class	III	II
Degree of protection	IP 54	
Running time - motor - spring return	40..75 s ~ 20 s	
Ambient Temperature - normal duty - safety duty - non-operating temperature	- 30 °C … + 50 °C The safe position will be attained up to max. 75°C - 40 °C … + 50 °C	
Connecting - motor - auxiliary switch	cable 1 m, 2 x 0,75 mm^2 cable 1 m, 6 x 0,75 mm^2 (BLF 24-T-ST) with pole plugs	
Thermal trips	Tf1: duct outside temperature 72°C Tf2/Tf3: duct inside temperature 72°C	

Fig. 18 Actuating mechanism BELIMO BLF 24-T(-ST)

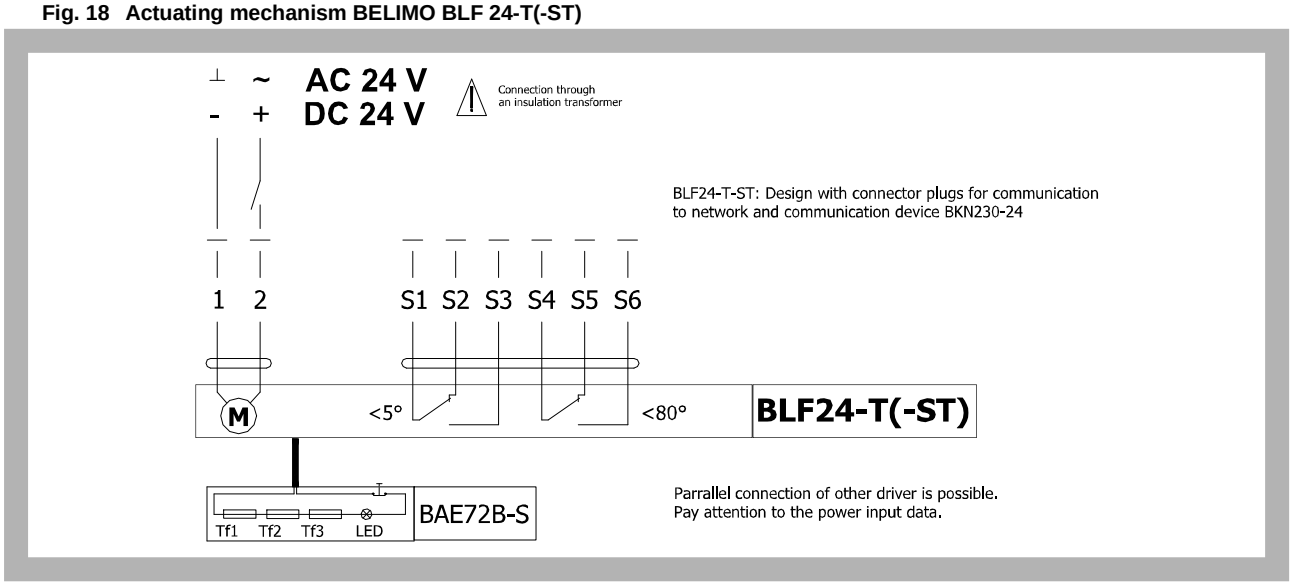

Fig. 19 Servopohon BELIMO BLF 230-T

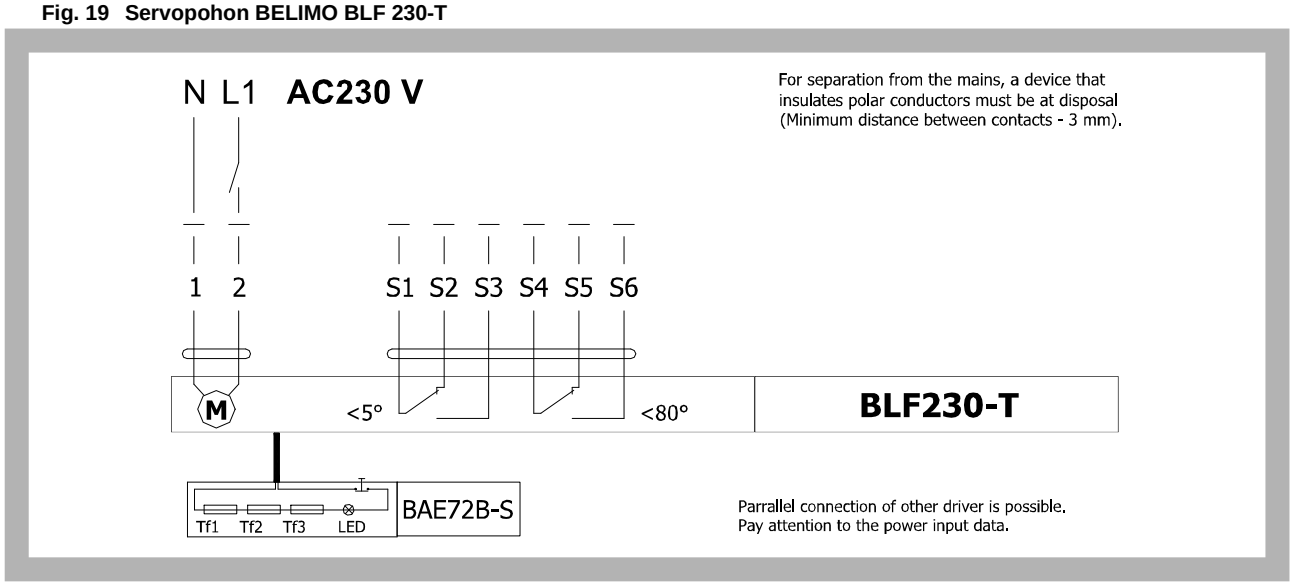

9.2. Communication and Supply Device

Tab. 9.2.1. Communication and Supply Device BKN 230-24

Communication and Supply Device	**BKN 230-24**
Nominal voltage	AC 230V 50/60Hz
Power consumption	3,5 W (operating position)
Dimensioning	11 VA (including actuating mechanism)
Protection Class	II
Degree of protection	IP 42
Ambient Temperature Storage Temperature	- 30 °C … + 50 °C - 40 °C … + 50 °C
Connection - mains - drive - terminal board	Cable 0,9 m with EURO plug of 26 type 6 pole plug, 3 pole plug screw terminals for conductor 2x1,5 mm^2

Fig. 20 Communication and Supply Device BKN 230-24

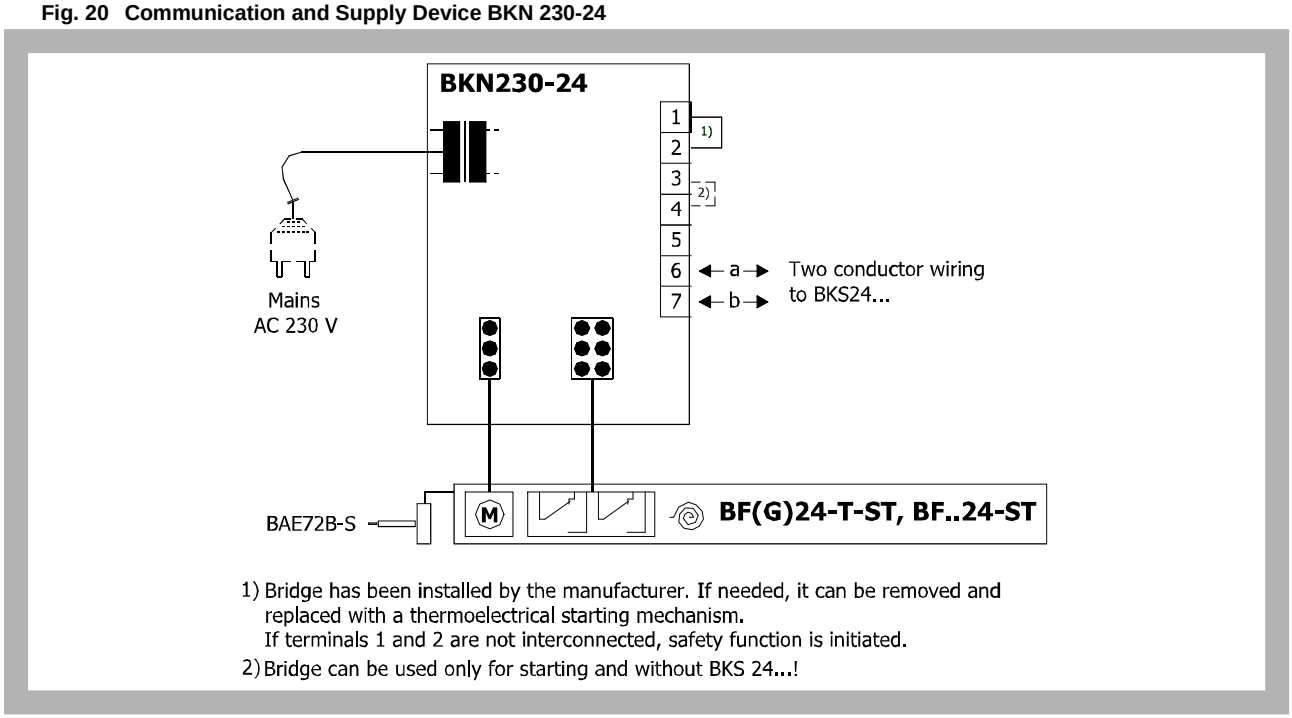

9.3. Communication and Control Devices

Tab. 9.3.2. Communication and Control Device BKS 24-9A

Communication and Control Device	BKS 24-9A
Nominal voltage	AC 24 V 50/60Hz
Power consumption	3,5 W (operating position)
Dimensioning	5,5 VA
Protection Class	III (safe small voltage)
Degree of protection	IP 30
Ambient Temperature	0 … + 50 °C
Connection	Terminals for conductor 2 x 1,5 mm^2

Fig. 21 Communication and Control Device BKS 24-9A

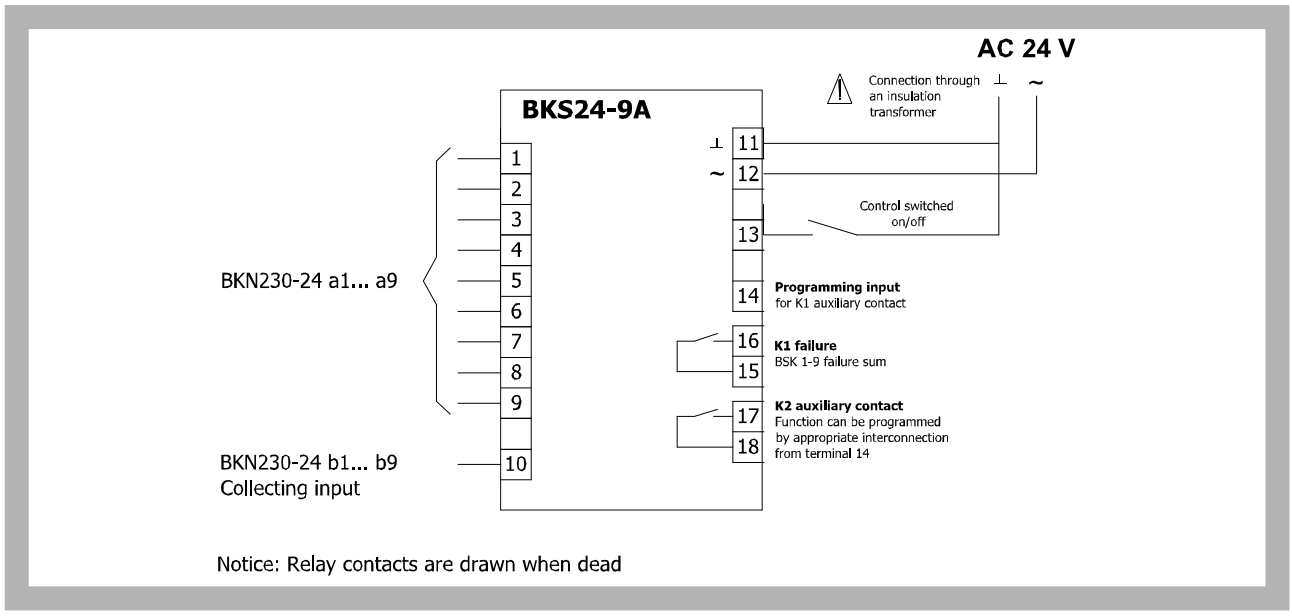

Tab. 9.3.1. Communication and Control Device BKS 24-1B

Communication and Control Device	**BKS 24-1B**
Nominal voltage	AC 24 V 50/60Hz
Power consumption	2,5 W (operating position)
Dimensioning	5 VA
Protection Class	III (safe small voltage)
Degree of protection	IP 30
Ambient Temperature	0 … + 50 °C
Connection	Into ZSO-11 connector which is not a part of BKS 24-1B. ZSO-11 connector has screw terminals 11 x 1,5 mm^2

Fig. 22 Communication and Control Device BKS 24-1B

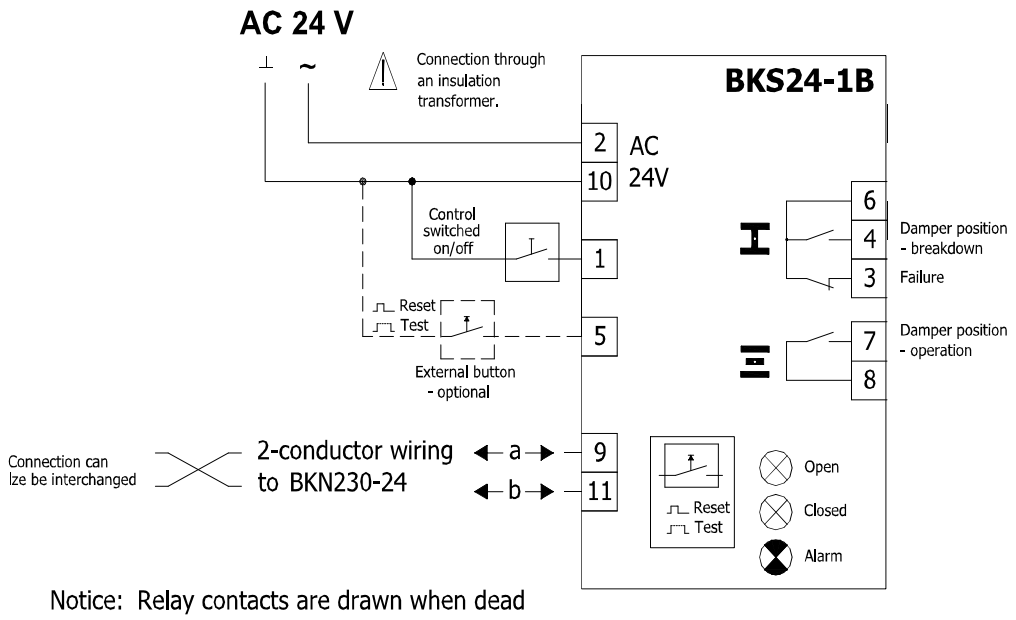

Signals and diagnosis				
Light diodes			Contacts	Description
Open	Closed	Alarm	State	Cause/Course
Closed	Closed	Closed	6 3	**Supply AC 24V** not available
Open	Open	Open	6 3	Check test cca 35s, sstarting with switching AC 24 on or pressing «Reset/Test» button
Closed	Closed	Flashing	6 3	**Current Failure,** possible cause: • short circuit or interruption of 2-conductor wiring or damper (at BKN...) • AC 230 V mains missing • defective thermoelectrical starting • Smoke annunciator activated • Exceeded operation time • Blocked damper
Closed	Closed	Open	6 3	**Failure saved in memory** • Fault in system signalled, system check should be done
Closed	Flashing	Closed	6 4	Damper (drive) turning into **the direction** of breakdown position
Closed	Open	Closed	6 4	Damper (drive) in **breakdown position** I
Flashing	Closed	Closed	6 7	Damper (drive) turning into **the direction** of operating position
Open	Closed	Closed	6 7	Damper (drive) in **operating position** II

IV. ORDERING INFORMATION

10. Ordering key

FDMD 180 - .40 TPM 092/13

- TPM 092/13 — technical specifications
- .40 — design acc. dle Tab. 2.3.1.
- 180 — size
- FDMD — type

V. DATA OF THE PRODUCT

11. Data label

11.1. Data label is placed on the casing of fire damper.

Fig. 23 Data label

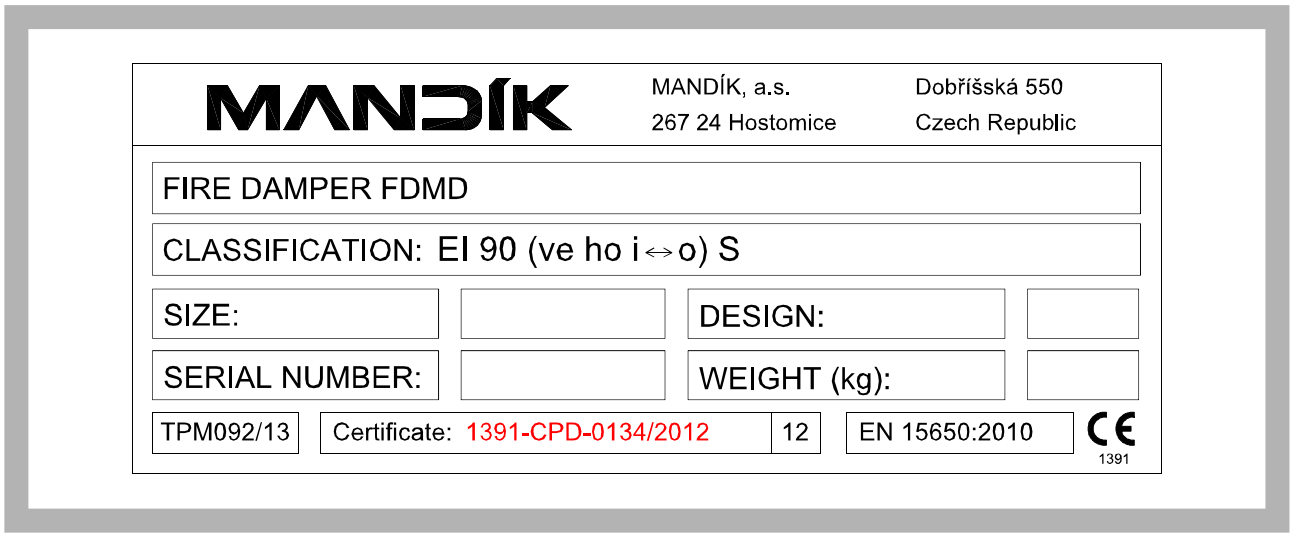

VI. MATERIAL, FINISHING

12. Material

12.1. Damper bodies are supplied in the design made of galvanized plate without any other surface finish.

12.2. Damper blades are made of fire resistant asbestos free boards made of mineral fibres.

12.3. Fasteners is galvanized.

VII. INSPECTION, TESTING

13. Inspection, testing

13.1. The appliance is constructed and preset by the manufacturer, its operation is dependent on proper installation and adjustment.

VIII. TRANSPORTATION AND STORAGE

14. Logistic terms

14.1. Dampers are transported by box freight vehicles without direct weather impact, there must not occur any sharp shocks and ambient temperature must not exceed + 40 °C. Dampers must be protected against mechanic damages when transported and manipulated. During transportation, the damper blade must be in the "CLOSED" position.

14.2. Dampers are stored indoor in environment without any aggressive vapours, gases or dust. Indoor temperature must be in the range from -5 °C to +40 °C and maximum relative humidity 80 %. Dampers must be protected against mechanic damages when transported and manipulated.

IX. ASSEMBLY, ATTENDANCE, MAINTENANCE AND REVISIONS

15. Assembly

15.1. All effective safety standards and directives must be observed during fire damper assembly.

15.2. To ensure reliable fire damper function it is necessary to avoid blocking the closing mechanism and contact surfaces with collected dust, fibre and sticky materials and solvents.

15.3. Manual operation

Without power supply, the damper can be operated manually and fixed in any required position. Release of the locking mechanism can be achieved manually or automatically by applying the supply voltage.

16. Entry into service and revisions

16.1. Before entering the dampers into operation after assembly and after sequential revisions, checks and functionality tests of all designs including operation of the electrical components must be done. After entering into operation, these revisions must be done according to requirement set by national regulations.

16.1.1. In case that dampers are found unable to serve for their function for any cause, it must be clearly marked. The operator is obliged to ensure so that the damper is put into condition in which it is able to function and meanwhile he is obliged to provide the fire protection another appropriate way.

16.1.2. Results of regular checks, imperfections found and all-important facts connected with the damper function must be recorded in the "FIRE BOOK" and immediately reported to the operator.

16.2. Before entering the dampers into operation after their assembly and by sequential checks, the following checks must be carried out for all designs.

16.2.1. Visual inspection of proper damper integration, inside damper area, damper blade, contact surfaces and silicon sealing.

16.2.2. Inspection hole disassembly: release the covering lid by unscrewing screws. Then tilt remove lid from its original position.

16.3. Necessary checks has to be provided for variant with el. actuating as follows:

16.3.1. Check of blade displacement into the breakdown position "CLOSED" can be done after cutting off the actuating mechanism supply (e.g. by pressing the RESET button at the thermoelectrical starting mechanism BAE 72B-S or cutting off the supply from ELECTRICAL FIRE SIGNALISATION). Check of blade displacement back into the "OPEN" position can be done after restoration of power supply (e.g. by releasing the RESET button or restoration of supply from ELECTRICAL FIRE SIGNALISATION).

Producent

MANDÍK

MANDÍK, a.s.
Dobříšská 550
26724 Hostomice
Czech Republic
Tel.: +420 311 706 706
Fax: +420 311 584 810, 311 584 382
E-Mail: mandik@mandik.cz
www.mandik.com

Wyłączny Dystrybutor

alnor systemy wentylacji

ALNOR Systemy Wentylacji Sp. z o.o.
Aleja Krakowska 10
05-552 Wola Mrokowska
Polska
Tel.: +48 227374000
Fax: +48 22 7374004
E-Mail: alnor@alnor.com.pl
www.alnor.com.pl