IZOL®safe-system pre-insulated bends

BSLIL 60

Download Wentyle
Download AlnorCAM
Order in B2B

Description

BSLIL - pre-insulated bend consists of inside and outside bend with EPDM gasket.

Ordering
Product code: **BSLIL - 10 - 200 - 60**

type
isolation
Ød
angle

Dimensions

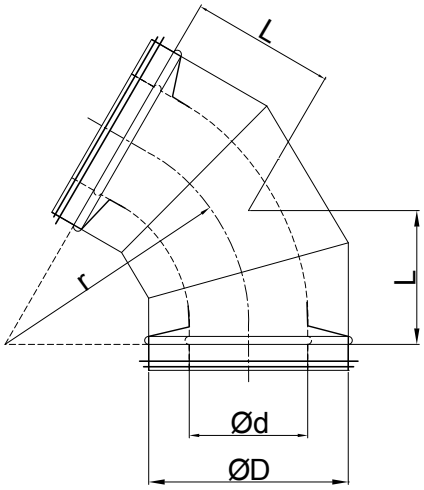

Ød [mm]	ØD [mm]	L [mm]	weight [kg]	Ød [mm]	ØD [mm]	L [mm]	weight [kg]
80	100	58	0,4	180	200	92	1,4
100	125	58	0,6	200	224	115	1,7
125	160	72	1,0	224	250	115	2,0
150	180	72	1,2	250	280	144	2,5
160	180	92	1,2				

ALNOR® ventilation systems
ALNOR® is a registered trademark and a technical patent protected by law. Any and all changes made by any unauthorized persons and/or entities is strictly prohibited.