IZOL®safe-system pre-insulated bends

BSLIL 30

Download Wentyle
Download AlnorCAM
Order in B2B

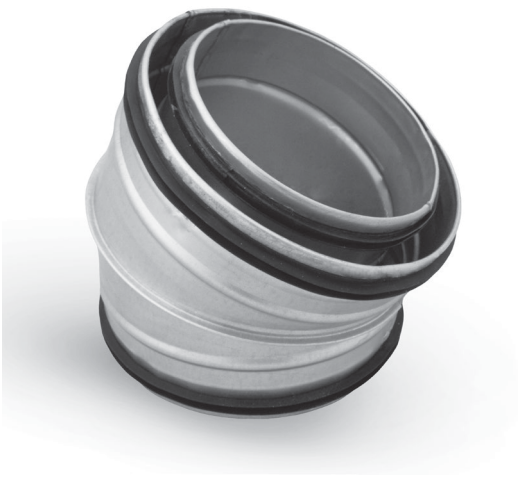

Description

BSLIL - pre-insulated bend consists of inside and outside bend with EPDM gasket.

Ordering
Product code: **BSLIL - 10 - 200 - 30**

type
isolation
Ød
angle

Dimensions

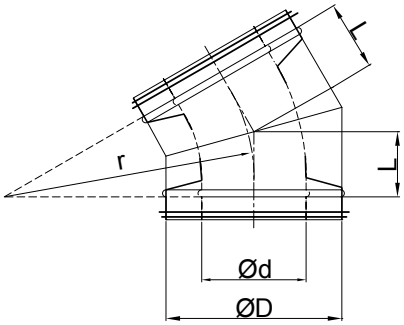

Ød [mm]	ØD [mm]	L [mm]	weight [kg]	Ød [mm]	ØD [mm]	L [mm]	weight [kg]
80	100	27	0,3	180	200	43	1,2
100	125	27	0,4	200	224	54	1,5
125	160	33	0,6	224	250	54	1,8
150	180	33	0,7	250	280	67	2,2
160	180	43	0,8				

ALNOR® is a registered trademark and a technical patent protected by law. Any and all changes made by any unauthorized persons and/or entities is strictly prohibited.